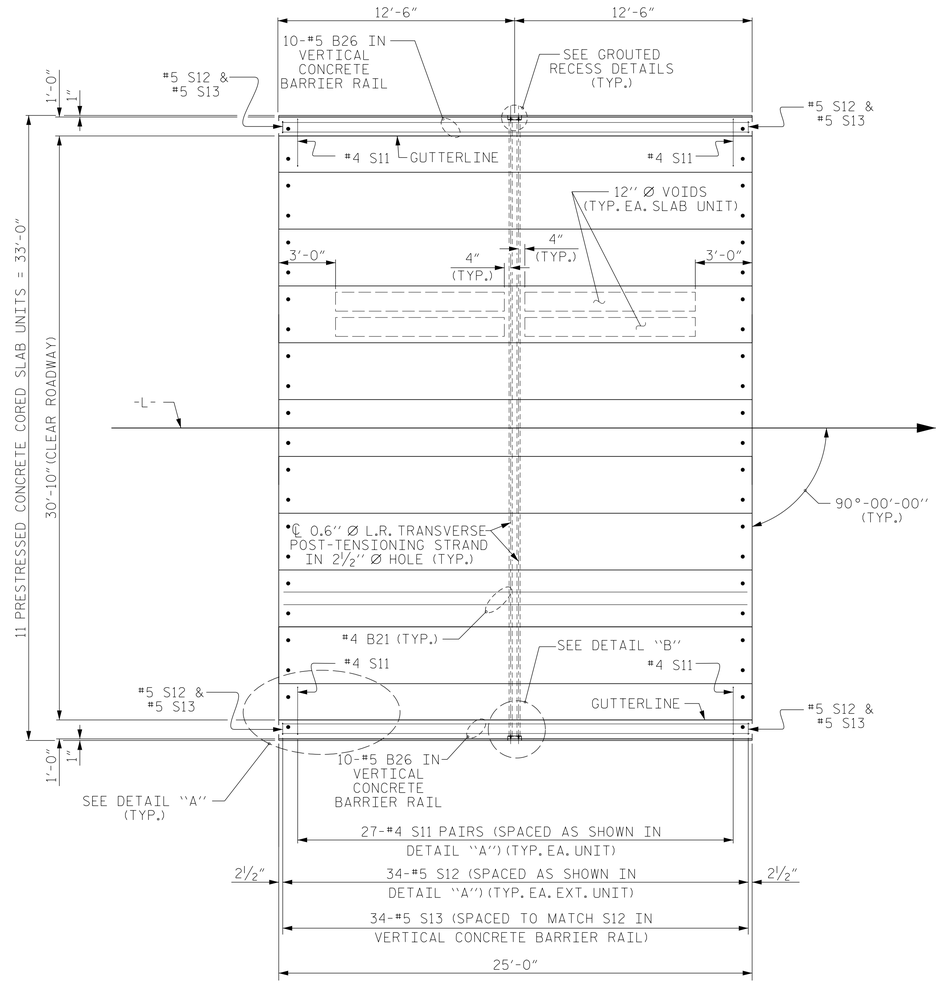

PLAN OF SPAN C

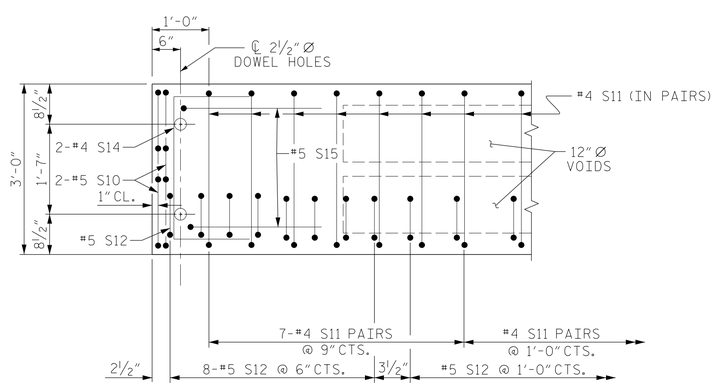

DETAIL "A"

(TYPICAL EACH END OF UNIT)
NOTE: EXTERIOR UNIT SHOWN - INTERIOR UNIT SIMILAR EXCEPT OMIT #5 S12 BARS.

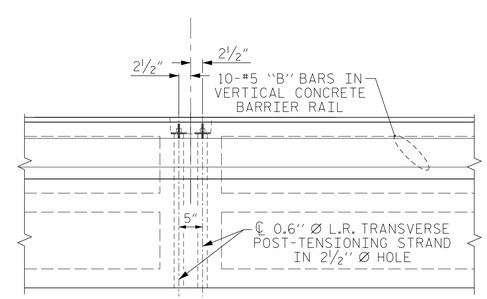

DETAIL "B"

#4 S11 BARS MAY BE SHIFTED AS NECESSARY TO MAINTAIN 1" CLEAR TO GROUTED RECESS AND 2½" Ø TRANSVERSE POST-TENSIONING STRAND HOLES

DRAWN BY:	E. PHELPS	DATE :	2/18
CHECKED BY:	J. LOFTUS	DATE :	2/18
DESIGN ENGINEER OF RECORD:	J. LOFTUS	DATE :	2/18

DocuSigned by: David Ruggles C4627680DF412422... 7/17/2018

NORTH CAROLINA PROFESSIONAL SEAL 11725 ENGINEER DAVID R. RUGGLES

DOCUMENT NOT CONSIDERED FINAL UNLESS ALL SIGNATURES COMPLETED

STEWART
Firm License No. C-1051
421 Fayetteville St,
Suite 400
Raleigh, NC 27601
T 919.380.8750
www.stewartinc.com

PROJECT NO. 17BP.5.R.77
WARREN COUNTY
STATION: 15+02.50 -L-

SHEET 4 OF 6

STATE OF NORTH CAROLINA
DEPARTMENT OF TRANSPORTATION
RALEIGH

SPAN C
PLAN OF 25' UNIT
30'-10" CLEAR ROADWAY
90° SKEW

REVISIONS								SHEET NO.
NO.	BY:	DATE:	NO.	BY:	DATE:			S-9
1			3					TOTAL SHEETS
2			4					22

WARREN 77
6/29/2018
...\400_009_920077_SMU_SUP03.dgn
USER:ephelps