NOTES

STIRRUPS IN CAP MAY BE SHIFTED AS NECESSARY TO CLEAR DOWELS.

THE CONCRETE IN THE SHADED AREA OF THE WING SHALL BE POURED AFTER THE VERTICAL CONCRETE BARRIER RAIL IS CAST IF SLIP FORMING IS USED.

FOR PILE SPLICE DETAILS, SEE SHEET 4 OF 8.

FOR WING DETAILS, SEE SHEET 3 OF 8.

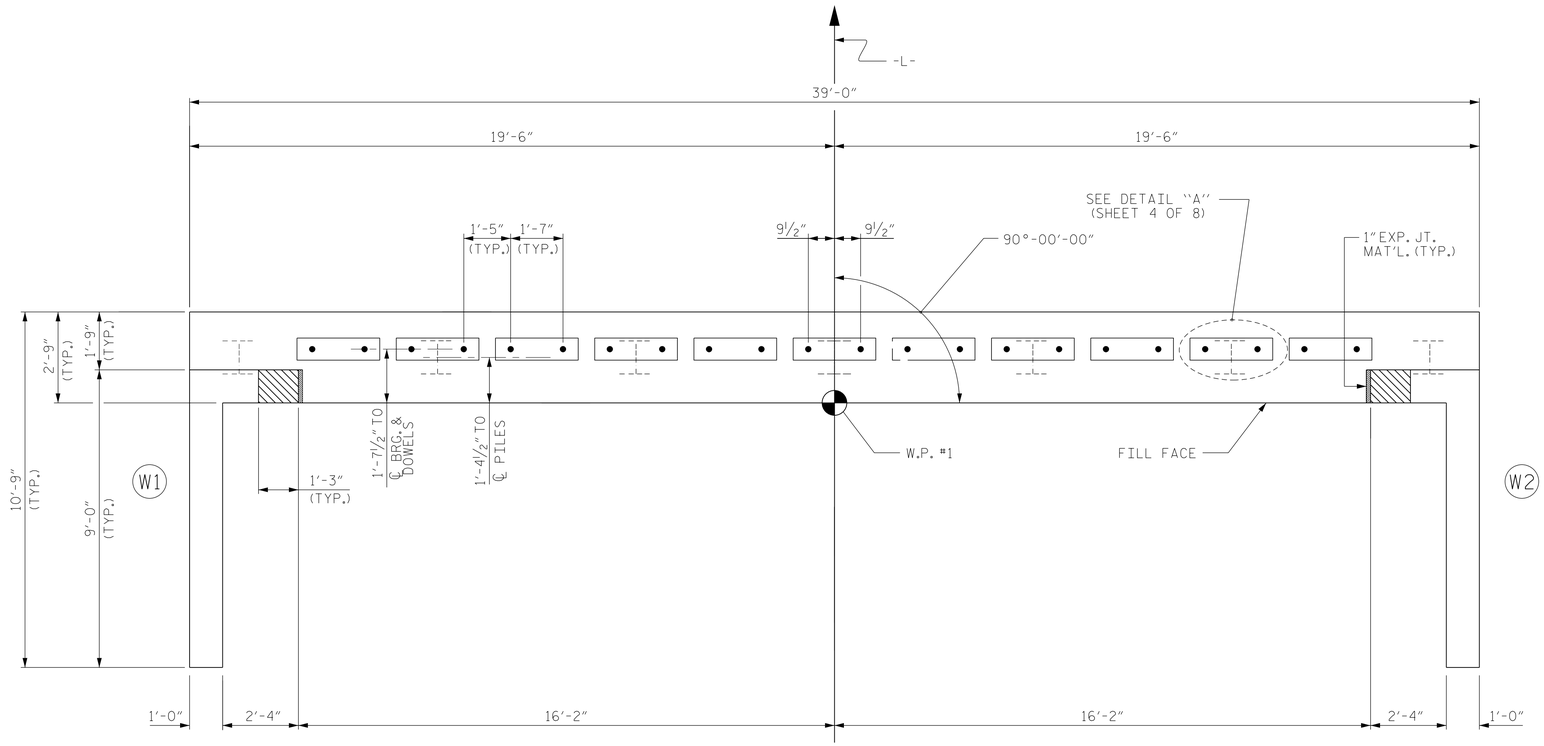

PLAN

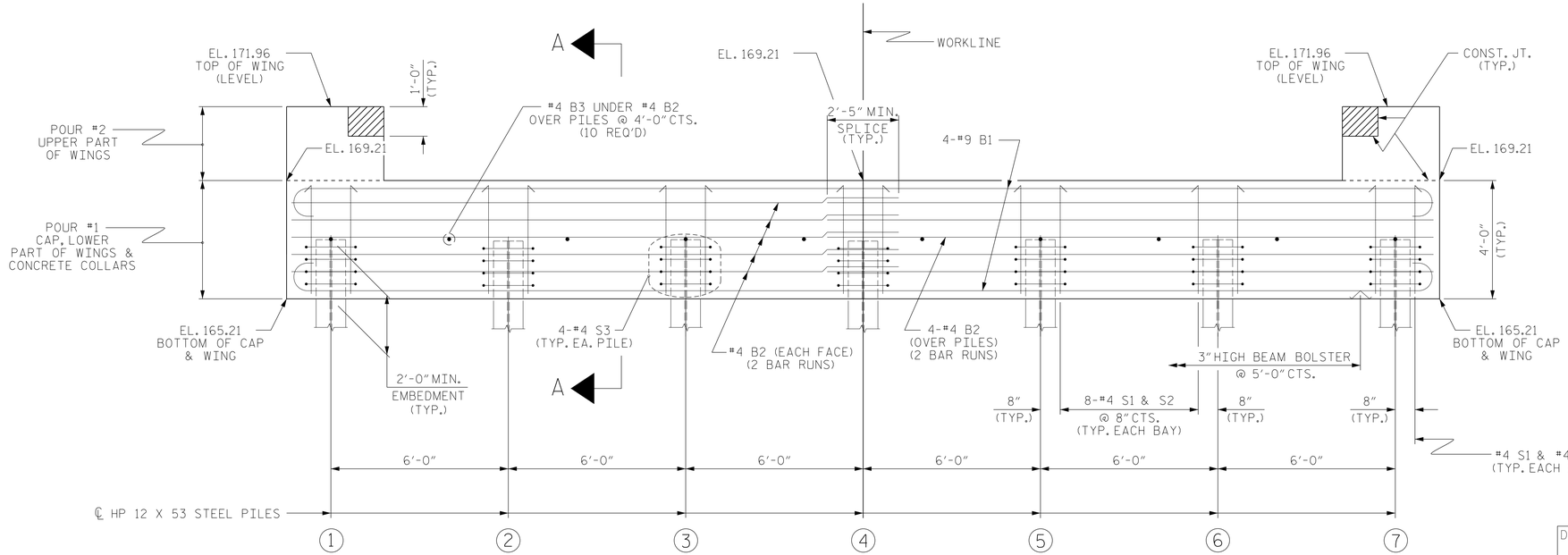

ELEVATION

WINGS NOT SHOWN FOR CLARITY.
FOR SECTION A-A, SEE SHEET 4 OF 8.
CONCRETE COLLARS FOR STEEL PILES NOT SHOWN IN PLAN AND ELEVATION VIEWS FOR CLARITY.
SEE "CORROSION PROTECTION FOR STEEL PILES DETAIL", SHEET 4 OF 8.

NORTH CAROLINA PROFESSIONAL SEAL 11725 ENGINEER DAVID R. RUGGLES

Designed by: David Ruggles C46278

7/17/2018

DOCUMENT NOT CONSIDERED FINAL UNLESS ALL SIGNATURES COMPLETED

STEWART

Firm License No. C-1051
421 Fayetteville St,
Suite 400
Raleigh, NC 27601
T 919.380.8750
www.stewartinc.com

PROJECT NO. 17BP.5.R.77

WARREN COUNTY

STATION: 15+02.50 -L-

SHEET 1 OF 8

STATE OF NORTH CAROLINA
DEPARTMENT OF TRANSPORTATION
RALEIGH

SUBSTRUCTURE

END BENT No. 1

REVISIONS						SHEET NO.
NO.	BY:	DATE:	NO.	BY:	DATE:	S-13
1			3			TOTAL SHEETS
2			4			22

DRAWN BY:	E. PHELPS	DATE :	2/18
CHECKED BY:	J. LOFTUS	DATE :	2/18
DESIGN ENGINEER OF RECORD:	J. LOFTUS	DATE :	2/18

WARREN 77

6/29/2018
...\400_013_920077_SMU_SUB01.dgn
USER:ephelps