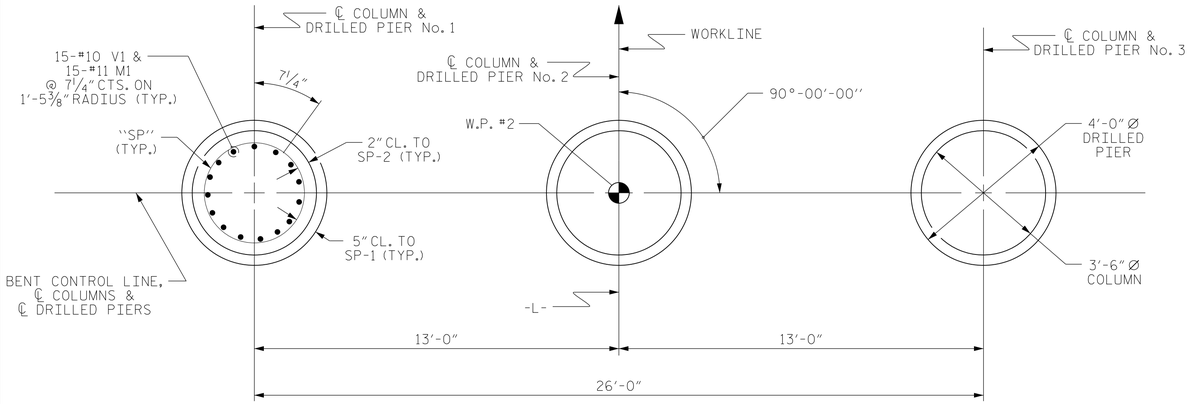

PLAN OF DRILLED PIERS & COLUMNS

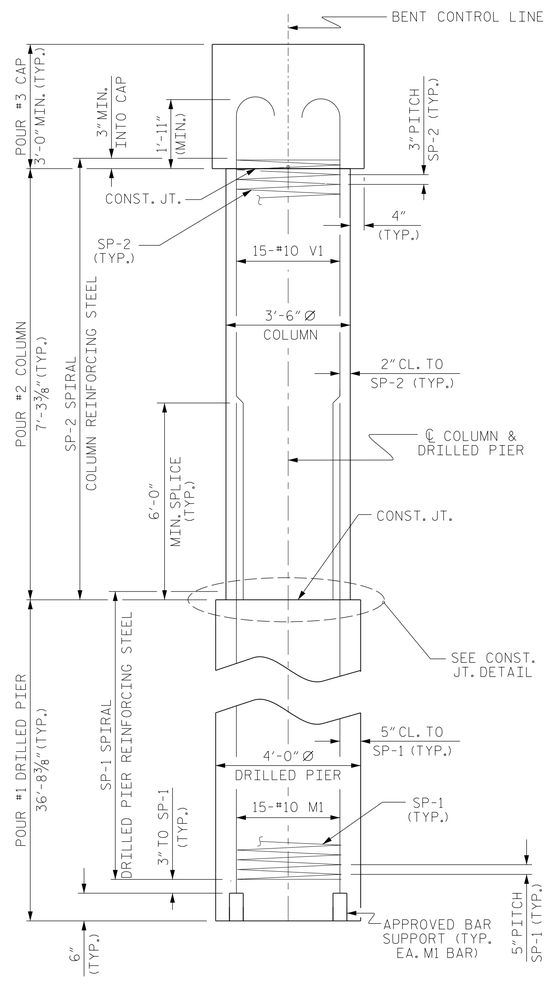

END ELEVATION

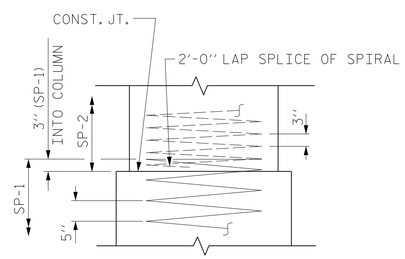

CONSTRUCTION JOINT DETAIL

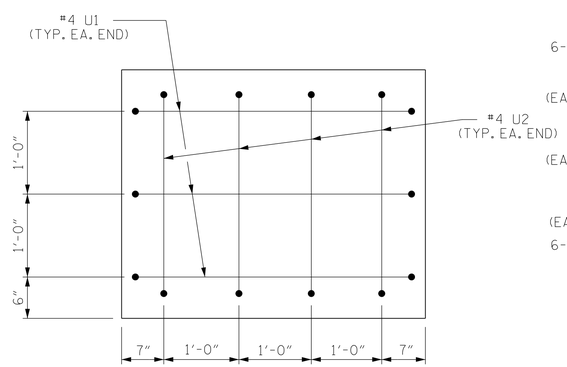

END OF CAP VIEW

(TYPICAL BOTH ENDS)

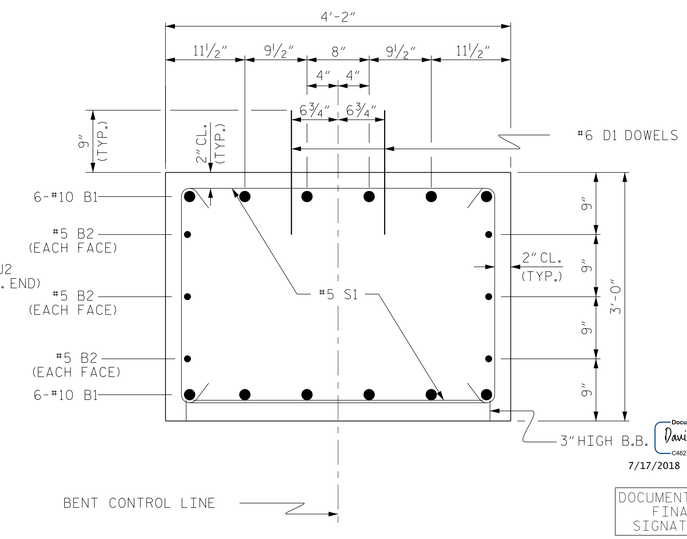

SECTION THRU CAP

BAR TYPES

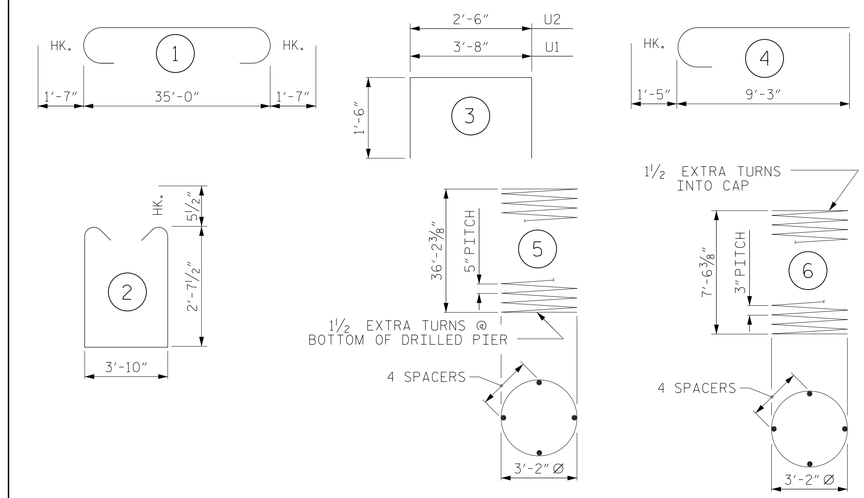

ALL BAR DIMENSIONS ARE OUT TO OUT

BILL OF MATERIAL

FOR ONE BENT

BAR	NO.	SIZE	TYPE	LENGTH	WEIGHT
B1	12	#10	1	38'-2"	1971
B2	6	#5	STR	35'-2"	220
D1	44	#6	STR	1'-6"	99
M1	45	#10	STR	45'-3"	8762
S1	58	#5	2	10'-0"	605
U1	6	#4	3	6'-8"	27
U2	8	#4	3	5'-6"	29
V1	45	#10	4	10'-8"	2065
REINFORCING STEEL (FOR ONE BENT)					13,778 LBS.
SP-1	3	*	5	865'-6"	2708
SP-2	3	**	6	310'-7"	1399
SPIRAL COLUMN REINFORCING STEEL (FOR ONE BENT)					4,107 LBS.

* THE SP-1 SPIRAL REINFORCING STEEL SHALL BE W31 OR D-31 COLD DRAWN WIRE OR #5 PLAIN OR DEFORMED BAR

** THE SP-2 SPIRAL REINFORCING STEEL SHALL BE W20 OR D-20 COLD DRAWN WIRE OR #4 PLAIN OR DEFORMED BAR

CLASS A CONCRETE BREAKDOWN (FOR ONE BENT)

POUR #2 (COLUMNS)	7.8 C.Y.
POUR #3 (CAP)	16.5 C.Y.
TOTAL CLASS A CONCRETE	24.3 C.Y.

DRILLED PIERS: (FOR ONE BENT)

DRILLED PIER CONCRETE POUR #1 (DRILLED PIERS)	51.2 C.Y.
4'-0" Ø DRILLED PIER NOT IN SOIL	25.0 LIN. FT.
4'-0" Ø DRILLED PIER IN SOIL	85.1 LIN. FT.
PERMANENT STEEL CASING FOR 4'-0" Ø DRILLED PIER	92.1 LIN. FT.
CSL TUBES	458.4 LIN. FT.

PROJECT NO. 17BP.5.R.77

WARREN COUNTY

STATION: 15+02.50 -L-

SHEET 6 OF 8

STATE OF NORTH CAROLINA
DEPARTMENT OF TRANSPORTATION
RALEIGH

SUBSTRUCTURE

BENT No. 1

NORTH CAROLINA PROFESSIONAL SEAL 11725 ENGINEER DAVID R RUGGLES

Documents produced by Stewart C-4403 7/17/2018

DOCUMENT NOT CONSIDERED FINAL UNLESS ALL SIGNATURES COMPLETED

STEWART

Firm License No. C-1051
421 Fayetteville St, Suite 400
Raleigh, NC 27601
T 919.380.8750
www.stewartinc.com

REVISIONS								SHEET NO.
NO.	BY:	DATE:	NO.	BY:	DATE:			S-18
1			3					TOTAL SHEETS
2			4					22

DRAWN BY:	E. PHELPS	DATE :	2/18
CHECKED BY:	J. LOFTUS	DATE :	2/18
DESIGN ENGINEER OF RECORD:	J. LOFTUS	DATE :	2/18

WARREN 77

6/29/2018
...\400.018.920077_SMU_SUB06.dgn
USER:ephelps