NOTES :

FOR BERM WIDTH DIMENSIONS, SEE GENERAL DRAWING.

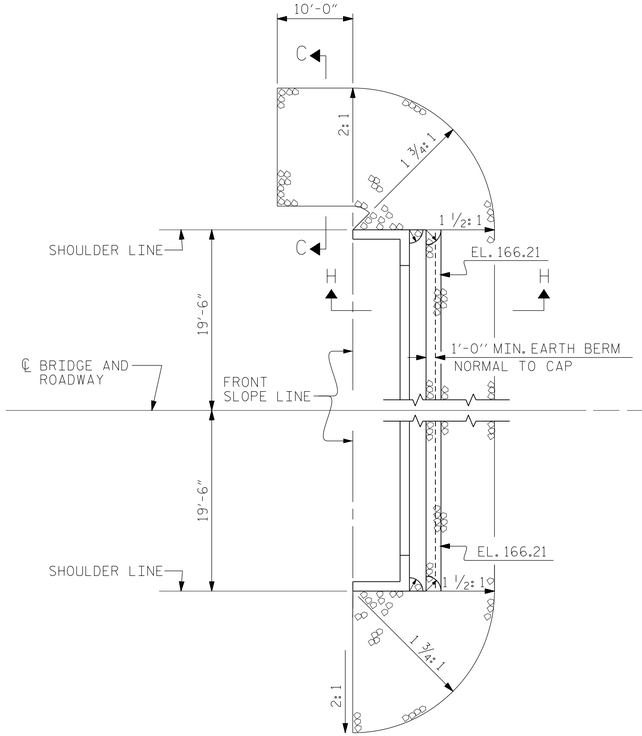

END BENT NO. 1

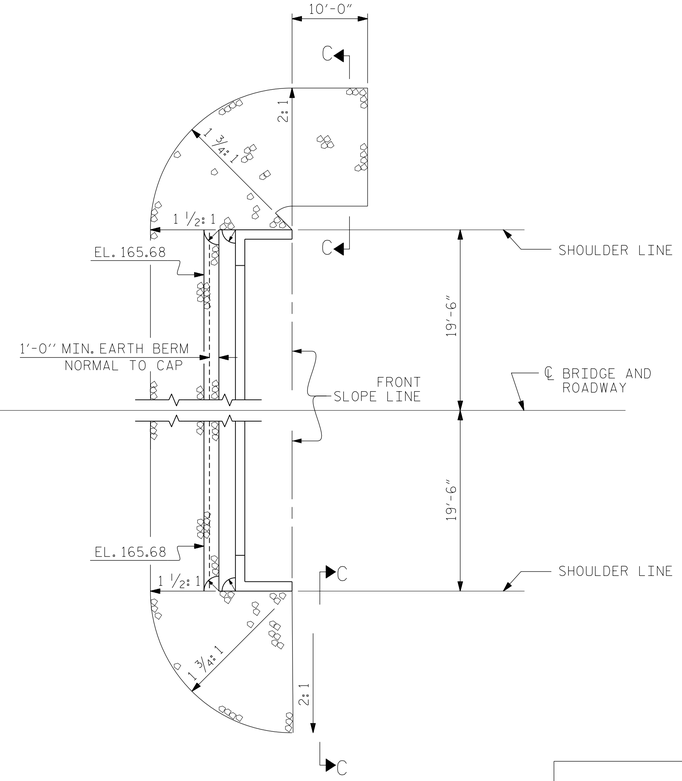

END BENT NO. 2

PLAN OF RIP RAP

ESTIMATED QUANTITIES		
BRIDGE @ STA. 15+02.50 -L-	RIP RAP CLASS II (2'-0" THICK)	GEOTEXTILE FOR DRAINAGE
	TONS	SQUARE YARDS
END BENT 1	77	85
END BENT 2	68	75

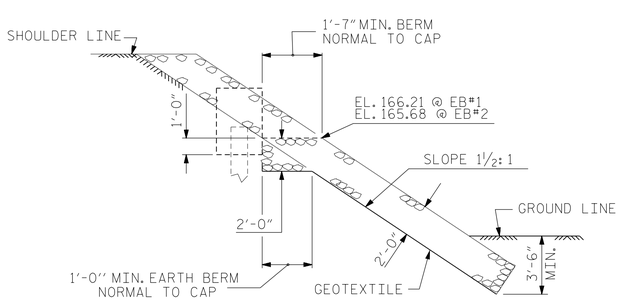

SECTION H-H

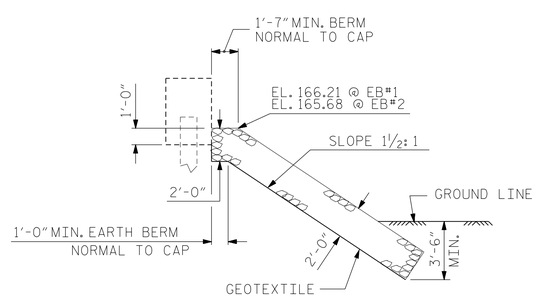

℄ SECTION

BERM RIP RAPPED

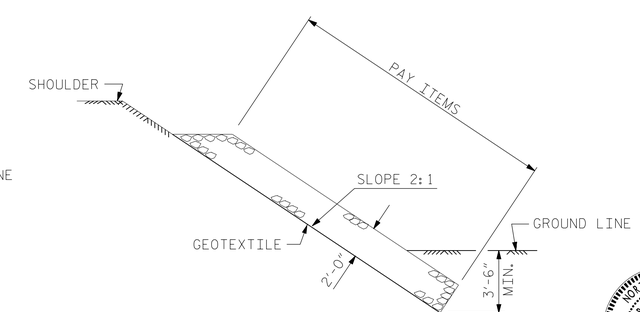

SECTION C-C

PROJECT NO. 17BP.5.R.77

WARREN COUNTY

STATION: 15+02.50 -L-

DocuSigned by: David Ruggles
C46276BDF412422...
7/17/2018

NORTH CAROLINA PROFESSIONAL SEAL 11725 ENGINEER DAVID R RUGGLES

DOCUMENT NOT CONSIDERED FINAL UNLESS ALL SIGNATURES COMPLETED

STEWART

Firm License No. C-1051
421 Fayetteville St,
Suite 400
Raleigh, NC 27601
T 919.380.8750
www.stewartinc.com

STATE OF NORTH CAROLINA
DEPARTMENT OF TRANSPORTATION
RALEIGH

STANDARD

RIP RAP DETAILS

REVISIONS								SHEET NO.
NO.	BY:	DATE:	NO.	BY:	DATE:			S-21
1			3					TOTAL SHEETS
2			4					22

DRAWN BY:	E. PHELPS	DATE :	2/18
CHECKED BY:	J. LOFTUS	DATE :	2/18
DESIGN ENGINEER OF RECORD:	J. LOFTUS	DATE :	2/18

WARREN 77

6/29/2018
...\400_021_920077_SMU_RR01.dgn
USER:ephelps

STD. NO. RR1 (Sht 2)